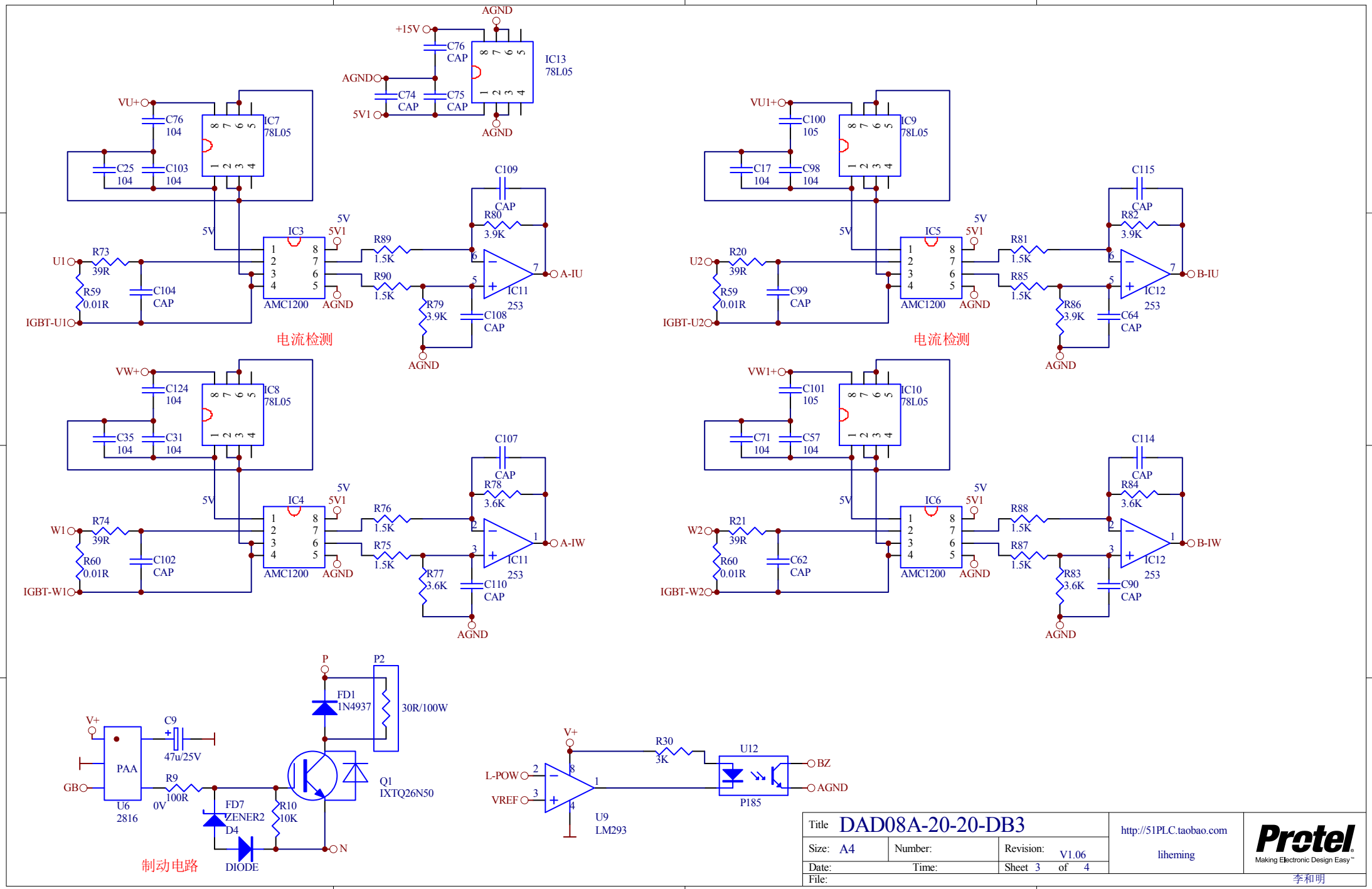
AGND
+15V
C76
CAP
IC13
78L05
AGND
C74
CAP
C75
CAP
5V1
AGND
VU+
C76
104
IC7
78L05
C25
104
C103
104
5V
IC3
5V
5V1
R73
39R
U1
R59
0.01R
C104
CAP
IGBT-U1
AMC1200
AGND
R89
1.5K
R90
1.5K
C109
CAP
R80
3.9K
IC11
253
A-IU
R79
3.9K
C108
CAP
AGND
电流检测
VU1+
C100
105
IC9
78L05
C17
104
C98
104
5V
IC5
5V
5V1
R20
39R
U2
R59
0.01R
C99
CAP
IGBT-U2
AMC1200
AGND
R81
1.5K
R85
1.5K
C115
CAP
R82
3.9K
IC12
253
B-IU
R86
3.9K
C64
CAP
AGND
电流检测
VW+
C124
104
IC8
78L05
C35
104
C31
104
5V
IC4
5V
5V1
R74
39R
W1
R60
0.01R
C102
CAP
IGBT-W1
AMC1200
AGND
R76
1.5K
R75
1.5K
C107
CAP
R78
3.6K
IC11
253
A-IW
R77
3.6K
C110
CAP
AGND
VW1+
C101
105
IC10
78L05
C71
104
C57
104
5V
IC6
5V
5V1
R21
39R
W2
R60
0.01R
C62
CAP
IGBT-W2
AMC1200
AGND
R88
1.5K
R87
1.5K
C114
CAP
R84
3.6K
IC12
253
B-IW
R83
3.6K
C90
CAP
AGND
P
P2
FD1
1N4937
30R/100W
V+
C9
47u/25V
PAA
GB
U6
2816
R9
100R
0V
FD7
ZENER2
D4
R10
10K
Q1
IXTQ26N50
N
DIODE
制动电路
V+
R30
3K
U12
L-POW
VREF
U9
LM293
BZ
AGND
P185
Title DAD08A-20-20-DB3
Size: A4
Number:
Revision: V1.06
Date:
Time:
Sheet 3 of 4
File:
http://51PLC.taobao.com
liheming
Protel
Making Electronic Design Easy
李和明